AC System and Inverter

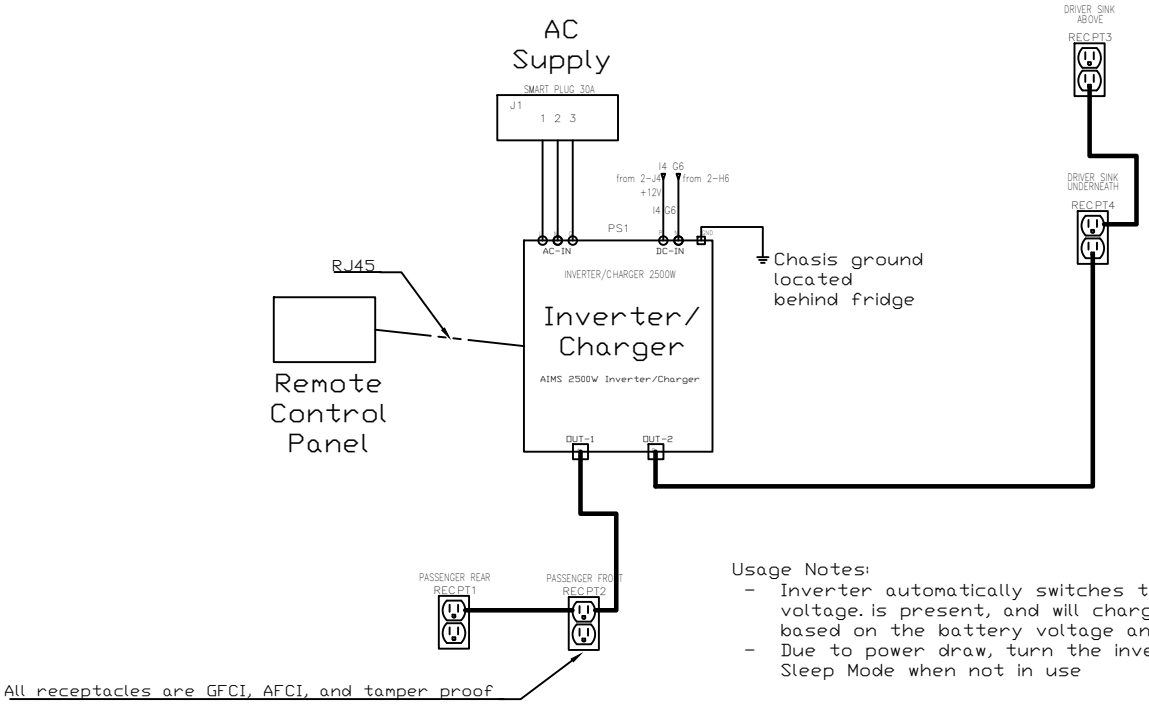

Usage Notes:

- Inverter automatically switches to AC-IN when AC voltage. is present, and will charge the batteries based on the battery voltage and charging profile
- Due to power draw, turn the inverter Off or to Sleep Mode when not in use

Autodesk

NO.	DATE	REVISION	BY

ENG TITLE

AC SYSTEM INVERTER

ENGINEER *Maroukis*	CHECKED BY
JOB NO	DRAWN BY *Maroukis*
SCALE	DATE 6/20/21
ENG NO *1*	
SHEET NO *1 OF 1*	

CAD DWG FILE C:\USERS\SMARO\MY DOCUMENTS\ACADE 2022\AEDATA\PROJ\TEST-PROJECT\DWG-01.DWG